Creo® Direct™

EASY-TO-USE, FAST, FLEXIBLE 3D DIRECT MODELING

Creo Direct is an indispensable 3D direct CAD solution because it gives you exactly what you need: An easy-to-use, fast, and flexible solution that enables more people to contribute to your product development process.

Companies face many challenges when developing products, especially in a hyper-competitive, global marketplace. In addition to designing products to meet ever-changing customer requirements, product development teams are constantly pressured to deliver winning products in less time and at a lower cost.

Creo Direct gives users throughout the product development process the ability to create and edit 3D CAD data using a direct modeling approach. Whether you are at the initial stages of conceptualizing a design, gathering feedback from customers, suppliers, and other partners, or trying to simplify your product geometry for CAE analyses, it gives you the right tool to complete the task most efficiently and effectively.

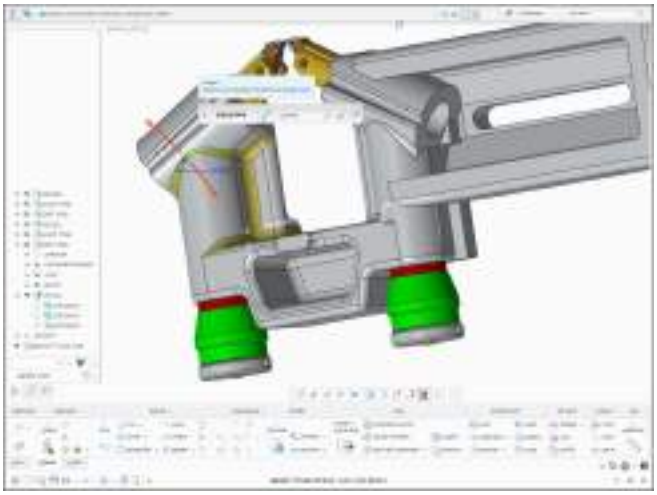

Creo Direct gives you the tools to create 3D concepts with ease.

Key benefits

- Easy to use and learn. The intuitive, direct modeling approach enables new or infrequent users to get up to speed quickly and create and edit 3D designs
- Faster, more flexible part and assembling modeling increases individual efficiency and productivity
- Easily accommodate late-stage changes to your engineering design quicker and with less frustration with this fast and easy approach
- Work more efficiently in a multi-CAD environment by easily incorporating and editing data from other CAD systems
- Increase process efficiency
  - Streamline workflows for CAE and tooling design
  - Improve and accelerate the design review process by allowing managers, field engineers, and other infrequent CAD users to edit 3D CAD data directly
  - Enable more users to leverage 3D CAD so they can contribute to – and ultimately accelerate – the product development process

Creo Direct supports a broad range of use cases across the product development process. A few examples of tasks that are impacted and improved include:

- Enable rapid concept design and faster bid proposals. You can create, edit, and iterate 3D design concepts faster with the software's direct modeling capabilities
- Create and modify 3D geometry faster and with more flexibility, accelerating your detailed design process
- Work faster with imported data. With the software, you can edit and create new geometry on imported data so you can work faster and more efficiently in a multi-CAD environment
- Accommodate late design changes. The softwaregives you more flexibility when editing your 3D CAD models so you can execute changes faster and easier
- Streamline CAE workflows. The software enables analysts to simplify or edit geometries without restrictions to prepare the 3D CAD models for downstream structural and thermal simulation or other analyses, without the help of a design engineer or expert CAD user
- Accelerate tooling design. Create tooling fixtures and jigs needed for manufacturing in less time. You can also simplify product geometry for NC and tooling design more efficiently with this fast, flexible approach
- Enable faster design reviews. Field engineers, managers, and other users can capture and incorporate feedback or new product ideas directly in the 3D CAD model

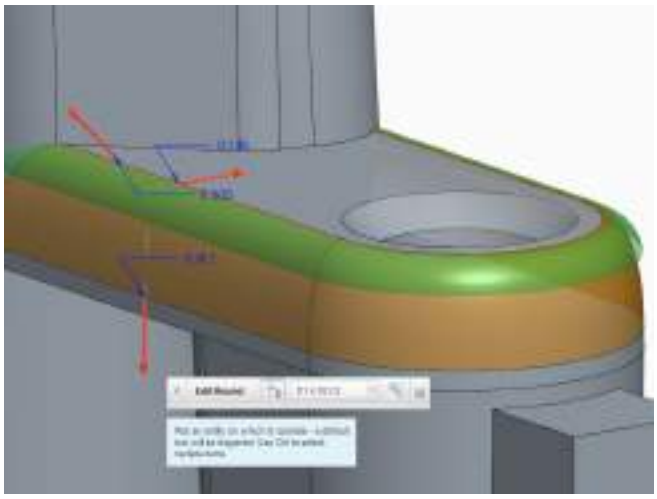

Quickly move geometry using the intuitive 3D dragger with automatic round and chamfer handling.

Capabilities and specifications

3D solid modeling

- Operations on sketches include extrude, revolve, and sweep geometry
- Operations on edges include rounds and chamfers
- Create drafts on a surface or set of surfaces
- Create hole, shell, mirror, and pattern geometry
- 3D Dragger, mini toolbar, floating dashboards, and other productivity enhancing tools help you quickly manipulate and position the geometry

Integrated 2D sketching

- Full suite of sketching tools
- Unconstrained sketching environment
- Guides, precision panels, and on-the-fly-dimensions support easy yet precise creation of 2D geometry
- Projection tool to use background 3D geometry
- Construction mode

3D model editing

- Move, attach, and remove geometry
- Geometrically modify analytic features such as cylinders, cones, and spheres
- Offset and substitute surfaces
- Modify rounds and chamfers based on the captured engineering design intent
- Control various geometric solution options, detected tangency situations and involved rounds and chamfers during geometric modifications

3D surface modeling

- Create, merge, and substitute quilt surfaces

3D assembly modeling

- Easily control component and object visibility
- Quickly position components and place them with on-the-fly constraints and snapping behavior
- Quickly insert new components, and create new component occurrences and copied parts in session
- Move geometry of multiple components in the assembly context
- Use planar and offset sections to interrogate inner geometric model characteristics and visualize geometric interferences of parts
- Activate parts and edit in the assembly context
- Delete rename and restructure components

Interoperability

- Import data from neutral file formats –STEP, IGES, etc.
- Export models to STEP, IGES, STL, Creo View, PDF, etc.
- Import models from SOLIDWORKS®, Solid Edge®, Creo Elements/Direct including NX for Design , Autodesk® Inventor®, Catia® V4 & V5

Seamless interoperability with Creo® Parametric™ and other Creo apps

- Provides access to extended design, analysis, manufacturing, and other capabilities
- Fully retains design intent when moving between apps and modeling modes

Rendering

- Apply appearances and scenes and display model fully shaded with reflections

Web capabilities provide instant access

- Seamless access to Windchill® for content and process managemen

Language support

- English, French, German, Italian, Russian, Spanish, Korean, Japanese, Simplified and Traditional Chinese

Platform support and system requirements

Visit the PTC support page for the most up-to-date platform support and system requirements.

For more information, visit: PTC.com/product/creo or contact your local sales representative.

© 2016, PTC Inc. (PTC). All rights reserved. Information described herein is furnished for informational use only, is subject to change without notice, and should not be taken as a guarantee, commitment, condition or offer by PTC. PTC, the PTC logo, Product & Service Advantage, Creo, Elements/Direct, Windchill, Mathcad and all other PTC product names and logos are trademarks or registered trademarks of PTC and/or its subsidiaries in the United States and other countries. All other product or company names are property of their respective owners. The timing of any product release, including any features or functionality, is subject to change at PTC's discretion.

J7818–CreoDirect–EN–0916